DWG NO.	SHEET 1 OF 1
EPF752	

REVISIONS

REV.	ZONE	DESCRIPTION	DATE	REVISED BY	ECN #
C		REDRAWN IN SOLIDWORKS	5/26/2017	QAC	
D	A2	ITEM 9 WAS 80000432	2/27/2018	MBC	42180
E	A2	ITEM 7 WAS 60011451 (QTY:1) UPDATED DRAWING VIEWS	12/6/2022	NCC	072727
F	A2	ITEM 2 WAS QTY: 1 80002050. ITEM 3 WAS QTY: 1 80002051. ITEM 8 WAS QTY: 1 80002054. ITEM 9 WAS QTY: REF 80009393. ADDED ITEMS 10-13	1/31/2024	CMS	81995, 81475, 81644

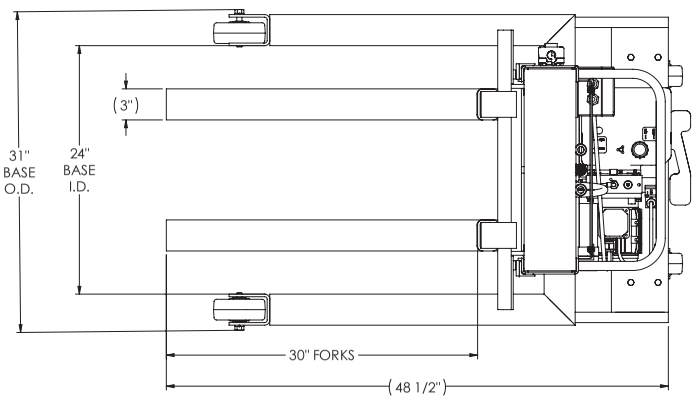

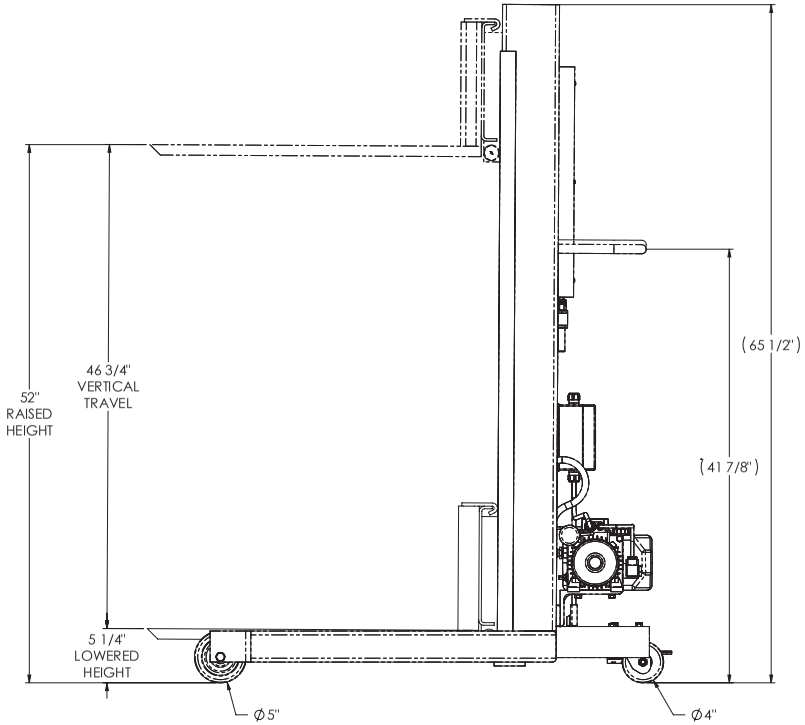

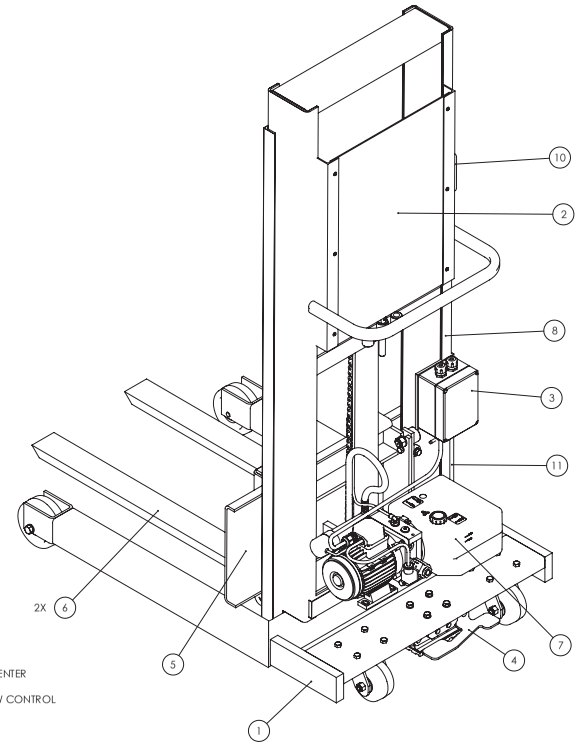

GENERAL DESCRIPTION:

1. MODEL: EPF752
2. ATTACHMENT #1 TYPE: FORKS
   1. CAPACITY: 1,000 LBM UNIFORM LOAD @ 18" LOAD CENTER
3. ELEVATING TIME: APPROX. 13 SECONDS
4. LOWERING TIME: FIXED W/ PRESSURE COMPENSATED FLOW CONTROL
5. POWER UNIT: INTERNAL 1.0 HP, 0.88 GPM
6. PRIMARY VOLTAGE: 115/1/60
7. CONTROL VOLTAGE: 24VDC
8. CONTROLLER: IP 54 (NEMA TYPE 3) HANDHELD PUSHBUTTON WITH 4 FT COIL CORD WIRED, INCLUDES STORAGE HOOK ON MAST
9. POWER CORD: 9 FT POWER CORD WIRED, INCLUDES CORD REEL
10. CONTROL PANEL: NEMA TYPE 4 MOUNTED & WIRED
11. FINISH: PAINT PER THE MANUFACTURING SPECIFICATION 60031377

MANUFACTURING NOTES:

1. FILL IN THE ATTACHMENT(S) CAPACITY & LOAD CENTER TAG(S) PER THE CAPACITY VALUES LISTED ABOVE

END USER NOTES:

1. N/A

	ITEM NO.	QTY.	U/M	DESCRIPTION	PART NO.
F	13		REF	HY PLUMBING SCHEMATIC	80002057
F	12		REF	TI ELC FNCTNL DESC	SFA0211745
F	11	1	EA	EL PWR CORD W/DECAL	2947300
F	10	1	EA	EL PB HHELD IP54	60079950
F D	9		REF	EL WIRING DIAG 115-1-60 DC PWR SPLY	80012706
F	8	1	EA	LD KIT LOC DIAG STACKER	80012825
	7	1	EA	HPU 0.75KW 1PH 3.1L TANK	SFA0793378
E	6	2	EA	SA FORK WELDMENT C119-13 30 W/ BEVEL	80002053
	5	1	EA	SA BACKPLATE ASSY 1000# B600 SLOT	80001141
	4	1	EA	ACP PORT KIT EPF 4.00D	80002052
F	3	1	EA	EL ARR STD STACKER EPF-ESF-SERIES	80012698
F	2	1	EA	HY ARR I STD STACKER EPF752-ESF750	80012700
	1	1	EA	SA FRAME AND MAST WELDMENT EPF752	80002049

3RD ANGLE PROJECTION

FRACTIONS ± 1/8
.XXX ± .005
.XX ± .01
ANGLES: ± .5°
UNLESS OTHERWISE SPECIFIED, DIMENSIONS ARE IN INCHES

PROJECT: -

USE OF PROPRIETARY INFORMATION LIMITED TO WRITTEN AGREEMENT

06328
CAGE CODE

PRESTO LIFTS
50 Commerce Way Norton MA 02766

TITLE: TL MODEL EPF752 STANDARD

DWG NO.: EPF752

DR: CQ
DATE: 05/26/17
WT.: - LB
SCALE: 1:12
REF: EPF752
MODEL: -
SIZE: D
SHEET 1 OF 1
REV: F

Released